HTM™ SENSORS

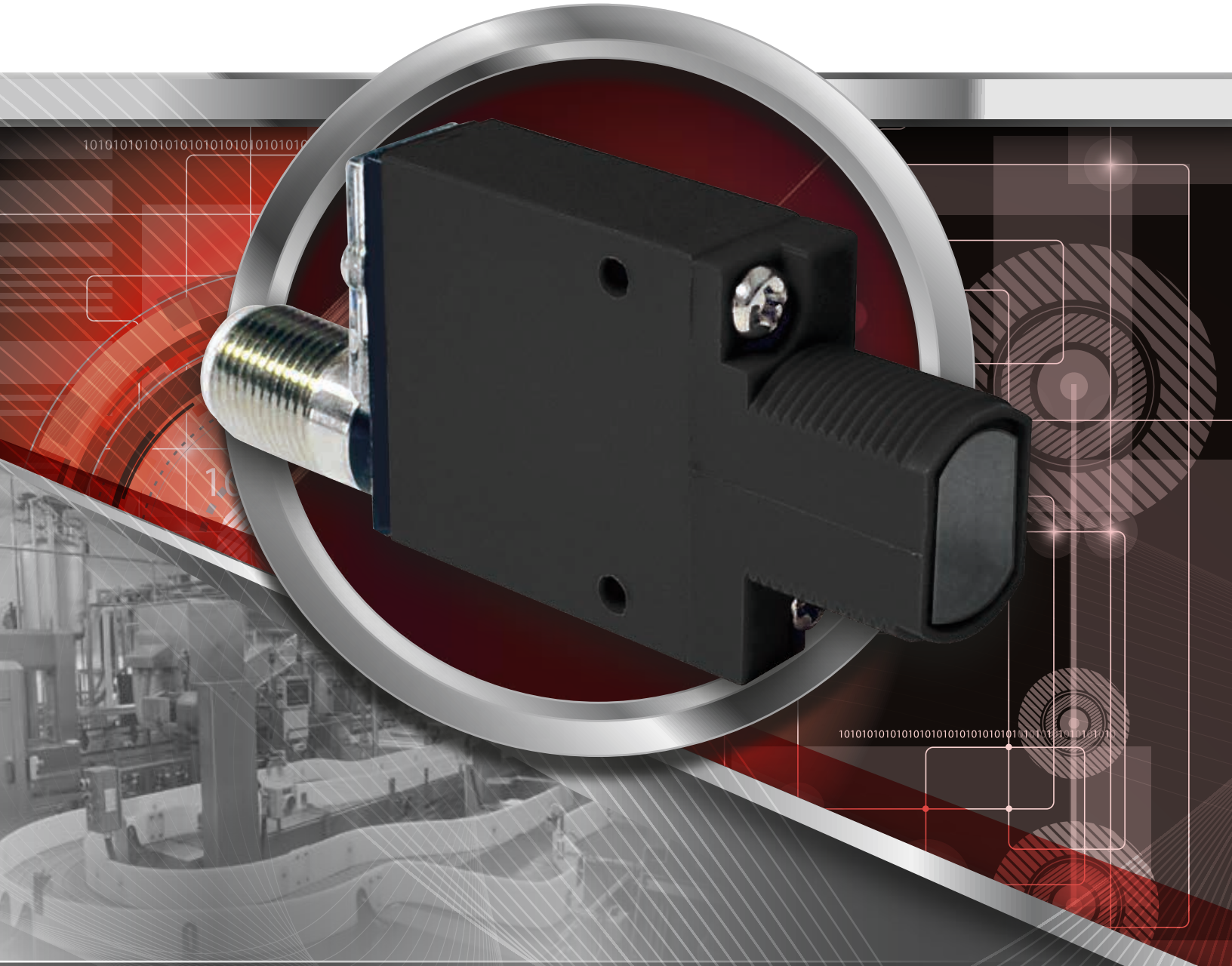

- MP SERIES PHOTOELECTRIC SENSORS FOR UNIVERSAL MOUNTING
- MOUNTS ON STANDARD OR FLAT BRACKET
- LONG RANGE - UP TO 30 m
- AVAILABLE IN DIFFUSE, RETROREFLECTIVE, THRU-BEAM, CONVERGENT AND FIBER OPTIC MODES
- COMPACT SIZE

	DIFFUSE	POLARIZED RETROREFLECTIVE	THRU-BEAM	CONVERGENT	FIBER OPTIC (THRU-BEAM)
SENSING DISTANCE	380 mm	2 m	30 m	43 mm	Depends on fiber used
LIGHT EMISSION	Infrared LED (880 nm)	RED LED (650 nm)	Infrared LED (880 nm)	RED LED (650 nm)	Infrared LED (880 nm)
POWER SUPPLY	10-30 V DC / 20-250 V AC Models				
CURRENT CONSUMPTION	DC Models - 25 mA Max. / AC Models - 25 mA Max (1.7 mA Max. for Emitter)				
OUTPUT CONFIGURATION	DC Models - Bipolar: One current sourcing (PNP) and one current sinking (NPN) open-collector transistor AC Models - SPST MOSFET solid-state relay with either N.O. or N.C. contact (light/dark operate selectable: 3-wire hook-up)				
MAX. CURRENT LOAD	DC Models - 150 mA / AC Models - 200 mA				
VOLTAGE DROP	DC Models - <2.0 V @ 150 mA / AC Models - <10 V @ 200 mA				
RESPONSE TIME	DC Models - 1 ms / AC Models - 8 ms (4 ms for Retroreflective Models)				
ADJUSTMENTS	LIGHT/DARK Operate sensitivity adjustment switch				
HOUSING MATERIAL	Reinforced thermoplastic polyester housing, totally encapsulated o-ring sealing, acrylic lenses and stainless steel screws				
ENVIRONMENT	-20 °C to +70 °C (-4 °F to 158 °F) ; Max. 90% RH @ 50 °C				
MECHANICAL PROTECTION	IP67 (IEC)				
CONNECTION	DC Models - M12 - Recomended Mating Cable: part # R-FS4TZ-V075 (straight), R-FA4TZ-V075 (right-angle) / AC Models - 2 m Cable				
REFERENCE STANDARD	IEC 60947-5-2				
DC Models - Quick Connect					
Emitter			MP-T030MD-EX9Q4LE		
NPN / PNP	MP-D0380D-CX9Q4UE	MP-L2000D-CX6Q4UE-PF	MP-T030MD-CX9Q4UE	MP-C0043D-CX6Q4UE	MP-TGFD-CX9Q4UE
AC Models - PreWired Cable					
Emitter			MP-T3000A-EX9C2L2		
SPST, Solid State	MP-D0380A-CX9C3U2	MP-L2000A-CX6C3U2-PF	MP-T3000A-CX9C3U2	MP-C0043A-CX6C3U2	MP-DGFA-CX9C3U2

NOTE: Specifications subject to change without notification.

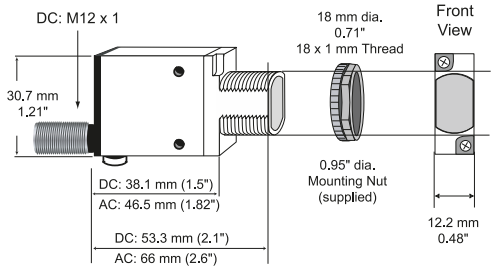

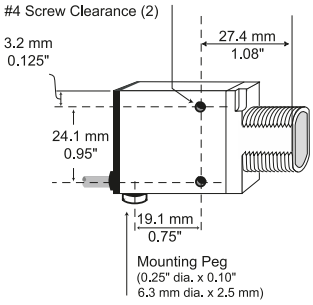

THE MP SERIES IS A SIMPLE, VERSATILE AND ECONOMICAL PHOTOELECTRIC SENSOR WITH AN EASY M18 MOUNTING STYLE AND A VARIETY OF SENSING FUNCTIONS.