HTM™ SENSORS

- LONG RANGE PHOTOELECTRIC SENSORS
- RUGGED DESIGN FOR MANY APPLICATIONS
- BUILT-IN TIMERS AND DELAYS FOR RELIABLE OUTPUTS
- AVAILABLE IN PNP, NPN, AND AC AND DC MODELS
- AVAILABLE WITH DC OR AC QUICK-CONNECT OR TERMINAL MODELS
- AVAILABLE IN LONG RANGE DIFFUSE, RETROREFLECTIVE OR THRU-BEAM

	THRU-BEAM	DIFFUSE	RETROREFLECTIVE
OPERATING RANGE	28 m (91.8 ft.)	0.3 m (11.8 in.)	10 m (32.8ft.)
LIGHT EMISSION	Infrared LED (880 nm)	Infrared LED (880 nm)	RED LED (660 nm)
POWER SUPPLY	DC: 10-30 VDC / AC: 20-250 VAC		
CURRENT CONSUMPTION	DC: <35 mA (no load) / AC: <2 VA		
INDICATOR LEDS	Green: Power, Yellow: Output, Red: Margin/SCP		
TIMING OPTIONS	No Delay, On Delay, Off Delay, One-shot (for Models with Timing Delay)		
TIME SETTINGS	Adjustable, 0.1...15 s (for Models with Timing Delay)		
MECHANICAL PROTECTION	IP66 / NEMA 4		
CIRCUIT PROTECTION	Reverse polarity protected (DC Models also have outputs short circuit and over current protected)		
HOUSING MATERIAL	Glass Fiber Reinforced Plastic		
LENS MATERIAL	Acrylic		
OPERATING TEMPERATURE	-25...+55 °C (-13...+131 °F)		
STORAGE TEMPERATURE	-40...+55 °C (-40...+131 °F)		
REFERENCE STANDARD	IEC 60947-5-2		
DC Models			
Emitter	RP76-T028MD-EY9T4L		
NPN - Timing Delay	RP76-T028MN-CY9T4U-T	RP76-D0300N-CY9T4U-BT	RP76-L010MN-CY6T4U-TP
PNP - Timing Delay	RP76-T028MP-CY9T4U-T	RP76-D0300P-CY9T4U-BT	RP76-L010MP-CY6T4U-TP
AC Models			
Emitter	RP76-T028MA-EY9T4L		
SPST Relay - Timing Delay	RP76-T028MR-CY9T4L-T	RP76-D0300R-CY9T4L-BT	RP76-L010MR-CY6T4L-TP

NOTE: Specifications subject to change without notification.

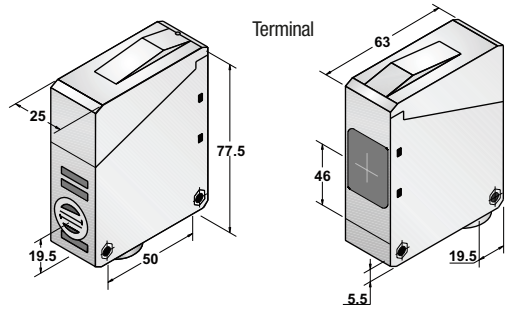

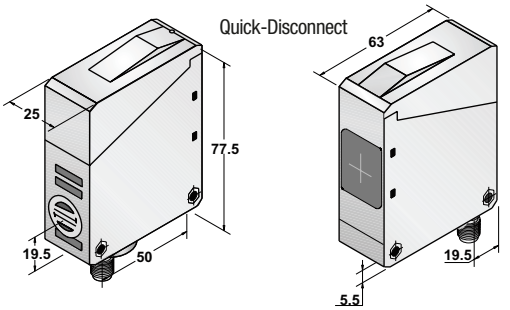

Emitter (DC)

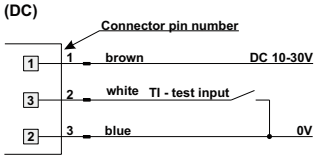

M12 Euco QD

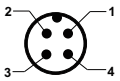

PNP

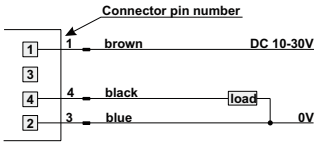

M12 Euco QD

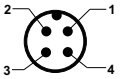

AC TYPE

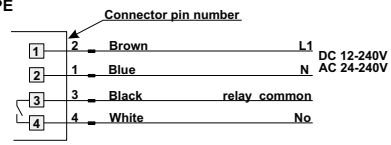

M12 Micro QD

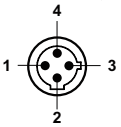

Emitter (AC)

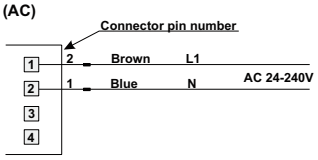

M12 Micro QD

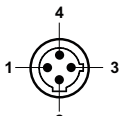

NPN

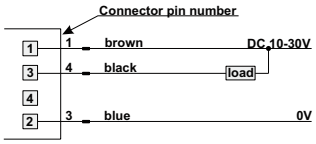

M12 Euco QD

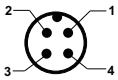

LONG RANGE PHOTOELECTRIC SENSORS ARE IDEAL FOR SENSING OVER LONG DISTANCES, AND COME WITH A RUGGED HOUSING FOR A VARIETY OF APPLICATIONS.