HTM SENSORS™

IO-Link

- MINIATURE HOUSING
- SENSITIVITY ADJUSTMENT VIA POTENTIOMETER
- IO-LINK FOR PROCESS OPTIMIZATION
- EXCELLENT BLACK/WHITE BEHAVIOR
- IMMUNITY TO MUTUAL INTERFERENCES

	THRU-BEAM	DIFFUSE	RETROREFLECTIVE	BACKGROUND SUPPRESSION	CLEAR OBJECT DETECTION
SENSING RANGE TYP. MAX.	30 m	1.5 m	8 m	300 mm	5 m
LIGHT SOURCE	N/A	Red LED 630 nm	Red LED 630 nm	PinPoint Red LED 640 nm	Red LED 630 nm
LIGHT SPOT SIZE (DISTANCE)	N/A	ø 15 mm @ 500 m / ø 26 mm @ 1 m	ø 30 mm @ 1 m / ø 140 mm @ 6 m	ø 6 mm @ 100 m / ø 10 mm @ 300 m	ø 40 mm @ 1 m
INDICATOR LED	Output: Yellow Excess Gain: Green	Output: Yellow Excess Gain: Green	Output: Yellow Excess Gain: Green	Output: Yellow Excess Gain: Green	Output: Yellow Excess Gain: Green
SUPPLY VOLTAGE RANGE (UB)	10-30 V DC				
IO-LINK	✓	✓	✓	✓	✓
SHORT CIRCUIT PROTECTION	✓	✓	✓	✓	✓
REVERSE POLARITY PROTECTION	✓	✓	✓	✓	✓
RESPONSE TIME[1]	<= 500 µs (normal) / <=1 ms / <= 250 µs	<= 340 µs (normal) / <=1 ms / <= 100 µs	<= 340 µs (normal) / <=1 ms / <= 100 µs	<= 500 µs (normal) / <=1 ms / <= 250 µs	<= 340 µs (normal) / <=1 ms / <= 100 µs
OUTPUT TYPE	PNP Complementary				
OPERATION MODE	Light On or Dark on Selectable wiring				
HOUSING MATERIAL	ABS				
LENS MATERIAL	PMMA				
IP RATING	IP67				
CABLE OR CONNECTOR	4-Pin M8 Male QD				
PART NUMBERS					
DC Emitter QD	H30-TTX-30000D-M8-3QD				
PNP	H30-TRX-30000P-M8-4QD	H30-DIF-1500P-M8-4QD	H30-RET-8000P-M8-4QD	H30-BGS-0300P-M8-4QD	H30-COD-5000P-M8-4QD
NPN	H30-TRX-30000N-M8-4QD	H30-DIF-1500N-M8-4QD	H30-RET-8000N-M8-4QD	H30-BGS-0300N-M8-4QD	H30-COD-5000N-M8-4QD
DC Emitter Pre-wired	H30-TTX-30000D-2M				
PNP Pre-wired	H30-TRX-30000P-2M	H30-DIF-1500P-2M	H30-RET-8000P-2M	H30-BGS-0300P-2M	H30-COD-5000P-2M
NPN Pre-wired	H30-TRX-30000N-2M	H30-DIF-1500N-2M	H30-RET-8000N-2M	H30-BGS-0300N-2M	H30-COD-5000N-2M

NOTE: Specifications subject to change without notification. [1]By default, "Normal" mode. "Fine" and "Fast" modes selectable via IO-Link.

IO-LINK FUNCTIONALITIES			
IO-Link version: 1.0	SIO mode: Supported	Process data: Detection state & stability alarm	Baudrate: COM2 (38.4 kBaud)
Special functions: Output configuration, output timing, sensor mode, detection counter, event flags, maximum and actual sensor temperature			

IO-Link

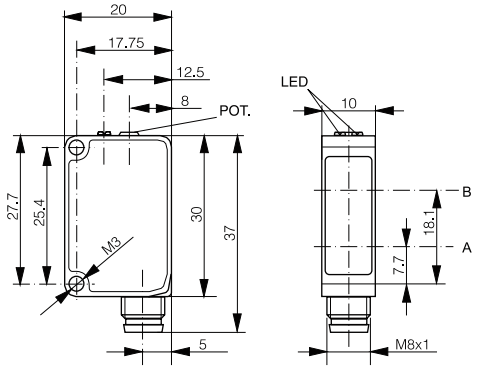

A: emitter axis B: receiver axis

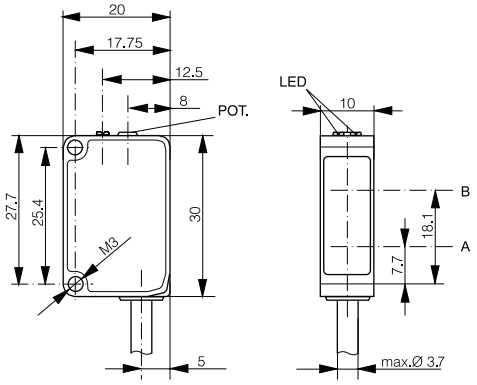

A: emitter axis B: receiver axis

WIRING DIAGRAM - 4-PIN QD

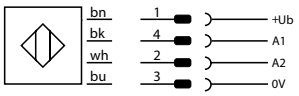

PINS

M8

WIRING DIAGRAM - PRE-WIRED

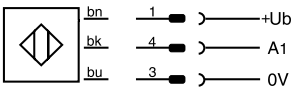

PHOTOELECTRIC SENSORS WITH VISIBLE LED ENSURE RELIABLE AND EXTENDED SENSING RANGES FOR LIMITED SPACES, WITH IP67 ENCLOSURE RATING AND ARE ECOLAB-APPROVED FOR USE IN HYGIENIC AREAS. IO-LINK COMMUNICATION FOR PROCESS OPTIMIZATION.